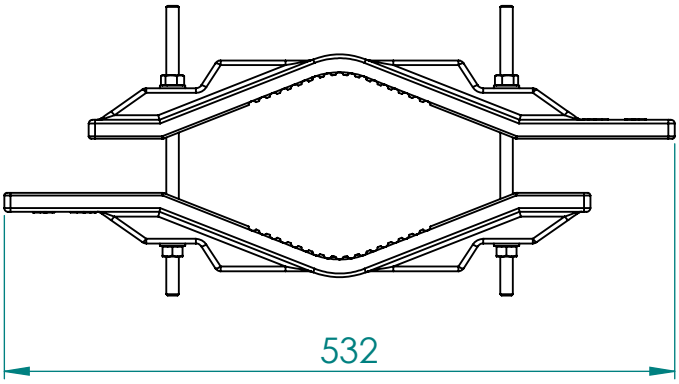

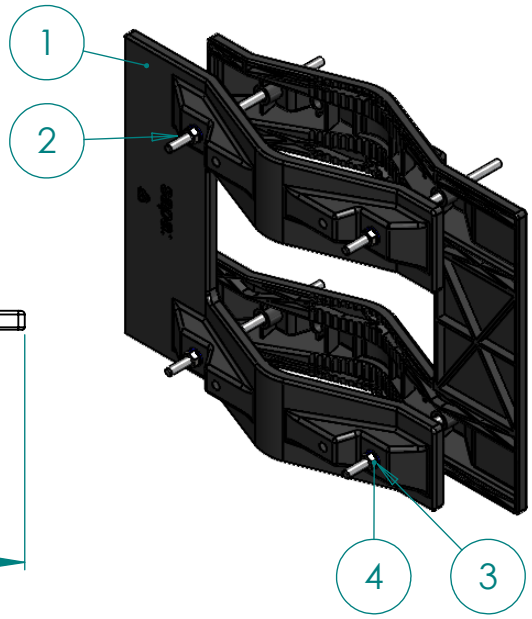

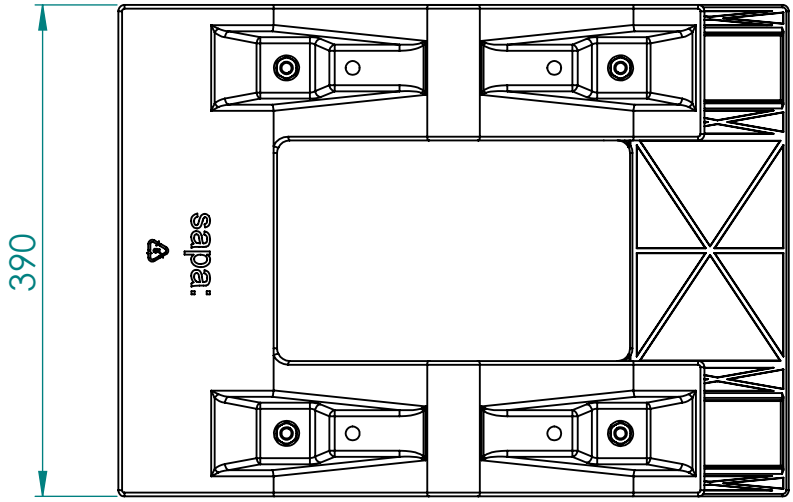

ITEM NO.	PART NUMBER	DESCRIPTION	QTY.
1	3711420001_01	Universele Grondvleugel PP (inkoop)	2
2	3711420001_02	Draadstang M10x230	4
3	Washer DIN 125 - A 10.5	Washer DIN 125 - A 10.5	8
4	Hexagon Nut ISO - 4032 - M10 - W - N		8

MODE	DESCRIPTION	DATE

Hydro

Pole Products

Pole Products
Hydro Extrusion Drunen B.V.

Alcoalaan 1,
NL-5151 RW Drunen, The Netherlands.
Tel: +31(0)416-386200.

www.hydroextrusions.com

THIS DRAWING REMAINS PROPERTY OF HYDRO POLE PRODUCTS IN DRUNEN AND MAY WITHOUT PERMISSION OF THE OWNER NOT BE MULTIPLIED, BE USED FOR THIRD PARTIES OR BE GIVEN TO THIRD PARTIES FOR PERUSAL.

AM.PROJ.

DIMENSIONS / TOLERANCES
LIGHT POLES ACCORDING EN40

DIMENSIONS IN MM

UNLESS OTHERWISE SPECIFIED

Changed by:
Created by: a186246

Date:
Date: 13-4-2010

Project nr.
-

Remarks:
-

Scale:
1:6

Weight:
2.98 Kg

FORMAT:
A4

MATERIAL:

DESCRIPTION:
UNI grondvleugelset 114-200

Drawing nr:
3711420001

Revision:
AA

Doc. status:
Released